CS 311: Operating Systems

Assignment 2 Solution

Group Members:
S11220447 - Josephine Silviya Kumar Mudliar:100% Contribution
S11219489 - Shaneel Chandar Singh: 100% Contribution

Section A Solutions:
Youtube link:
Find below the playlist containing all the video solutions
https://youtube.com/playlist?list=PLgrROv9trm1617g3tLK5tnrXmvNWSA2Gy&si=gPdWodmvRmpQPWcM

Part 2:
g) Explain the benefits of your choice of Raid 5 for data redundancy and performance.

Raid 5 was chosen for this assignment as it provides an effective balance of data redundancy, storage efficiency and performance by evenly distributing parity information across multiple disks(Anon,2023). This also allows the system to withstand drive failure without data loss. In addition to that, although due to the parity calculation, write performance is slightly impacted, Raid 5 supports hot swapping and enabling drive replacement without downtime hence increasing overall performance(Cladwell, 2023). Conclusively, this combination of fault tolerance, read performance and cost effective use of disk space makes Raid 5 a popular choice where data redundancy and performance are essential.

Part 3:
e) Evaluate the use of RAID, Storage Pools, BitLocker, Virtual Memory(Paging) and disk Partitioning.

Firstly, Raid enhances data reliability and performance by combining multiple disks into one array. This offers high fault tolerance using redundancy and improved read and write speeds via data striping. On one hand, while it increases storage efficiency, on the other, it requires proper management due to a lot of potential issues arising from complexity(Cladwell, 2023).Secondly, storage pools allow multiple physical disks to be combined into a single logical storage unit. By doing so, it simplifies management and provides flexibility. It also enables scalable expansion of capacity and supports data resiliency(SearchITOperations). Furthermore, Bitlocker provides full disk encryption to protect data from unauthorized access. In addition to that, paging is a memory management technique that allows an operating system to use its secondary storage as part of the physical memory. This allows programs to exceed available RAM. It simply divides memory into fixed page sizes and retrieves them when needed hence improving memory utilization but may slow down performance due to disk access(WhatIs.com). And finally, disk partitioning simply divides a physical disk into separate partitions hence enabling better data organization and easier system management.

Section B: Critical Analysis & Thinking
Scenario 1:

	Allocation					Request					Available				
	A	B	C	D	E	A	B	C	D	E	A	B	C	D	E
P0	1	0	1	1	0	0	1	0	0	1	2	1	1	2	1
P1	1	1	0	0	0	0	0	1	0	1					
P2	0	0	0	1	0	0	0	0	0	1					
P3	0	0	0	0	0	1	0	1	0	1					

a) Resource Allocation Graph

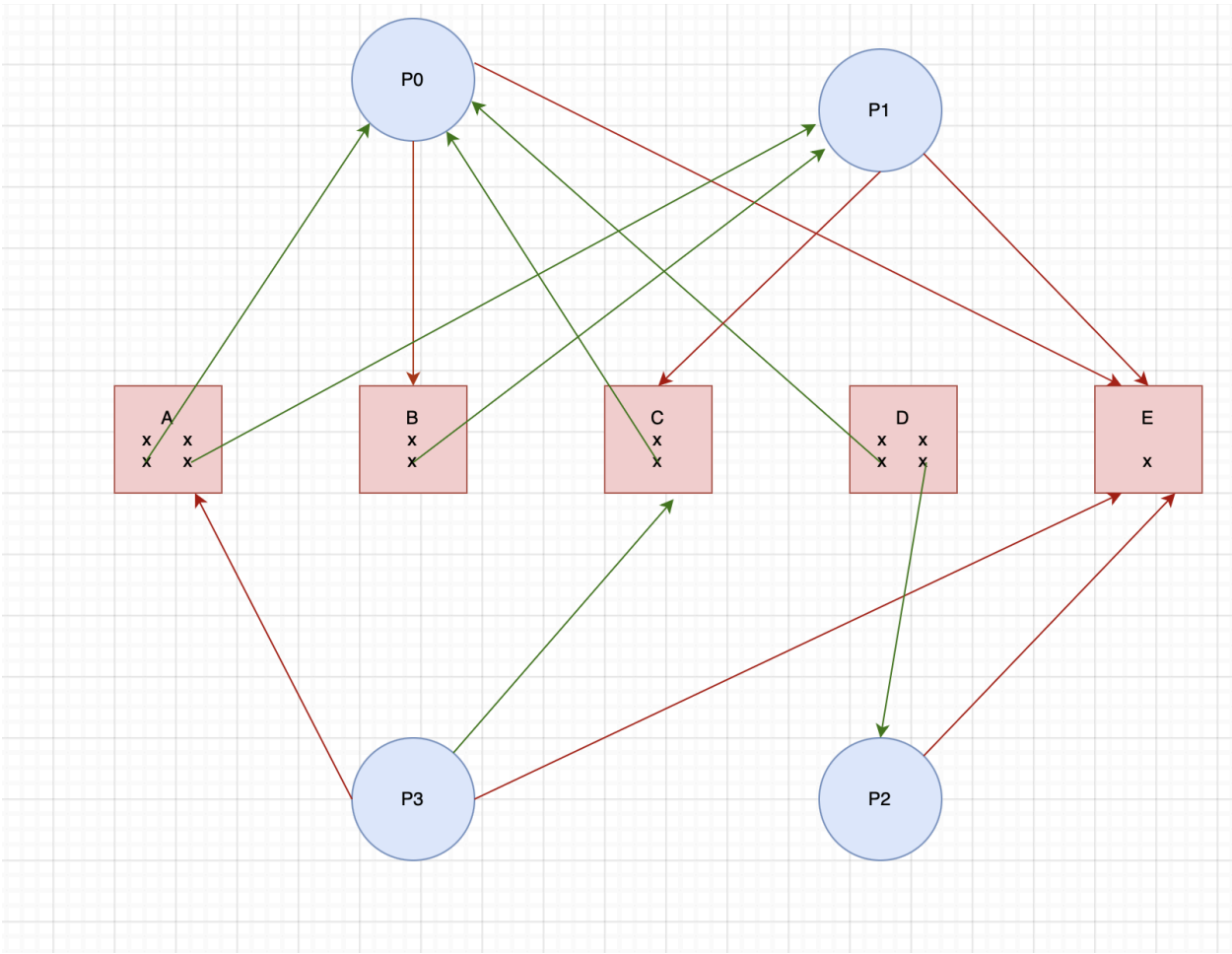

b) Deadlock Calculation

Process	Allocation	Request		If request<= work, new work = work + allocation		
P0	1 0 1 1 0	0 1 0 0 1		0 1 0 0 1 <= 2 1 1 2 1 ; true, new work =	2 1 1 2 1 + 1 0 1 1 1 =	3 1 2 3 1
P1	1 1 0 0 0	0 0 1 0 1		0 0 1 0 1 <= 3 1 2 3 1; true, new work =	3 1 2 3 1 + 1 1 0 0 0 =	4 2 2 3 1
P2	0 0 0 1 0	0 0 0 0 1		0 0 0 0 1 <= 4 2 2 3 1; true, new work =	4 2 2 3 1 + 0 0 0 1 0 =	4 2 2 4 1
P3	0 0 0 0 0	1 0 1 0 1		1 0 1 0 1 <= 4 2 2 4 1; true, new work =	4 2 2 4 1 + 0 0 0 0 0 =	4 2 2 4 1
Available						
2 1 1 2 1				Exec State: P0->P1->P2->P3		
				Thus safe state		

Looking at the above calculation, it can be concluded that using Bankers Deadlock Detection Algorithm, no deadlock was found in the system, thus keeping the system in a safe state.

c) None of the processes are in a deadlock state, as all of the processes complete in the order, P0→P1→P2–P3.

Scenario 2:

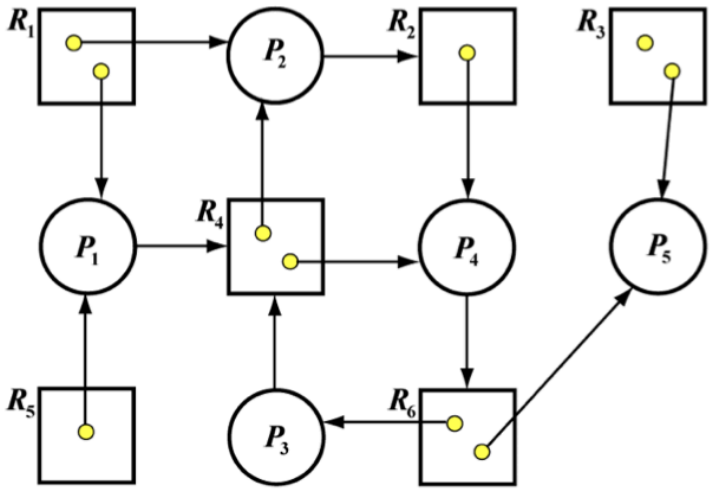

a) Allocation, Request and Available Matrix

	Allocation	Request	Available
Process	R1 R2 R3 R4 R5 R6	R1 R2 R3 R4 R5 R6	R1 R2 R3 R4 R5 R6
P1	100010	000100	001000
P2	100100	010000	
P3	000001	000100	
P4	010100	000001	
P5	001001	000000	

b) Do a step by step execution of the deadlock detection algorithm. For each step, add and remove the directed edges, and redraw the resource allocation graph.

STEP 1:

IF Request <= Available; new avail = avail + allocation

P1: 000100 <= 001000 ; false

P2: 010000 <= 001000 ; false

P3: 000100 <= 001000 ; false

P4: 000001 <= 001000 ; false

P5: 000000 <= 001000 ; true → 001000+001001
=002001

Therefore, All Request And Allocated Edges for P5 are removed and it enters the execution state ; exec state{P5}

New Resource Allocation Graph and Matrix:

	Allocation	Request	Available
Process	R1 R2 R3 R4 R5 R6	R1 R2 R3 R4 R5 R6	R1 R2 R3 R4 R5 R6
P1	100010	000100	002001
P2	100100	010000	
P3	000001	000100	
P4	010100	000001	
P5			

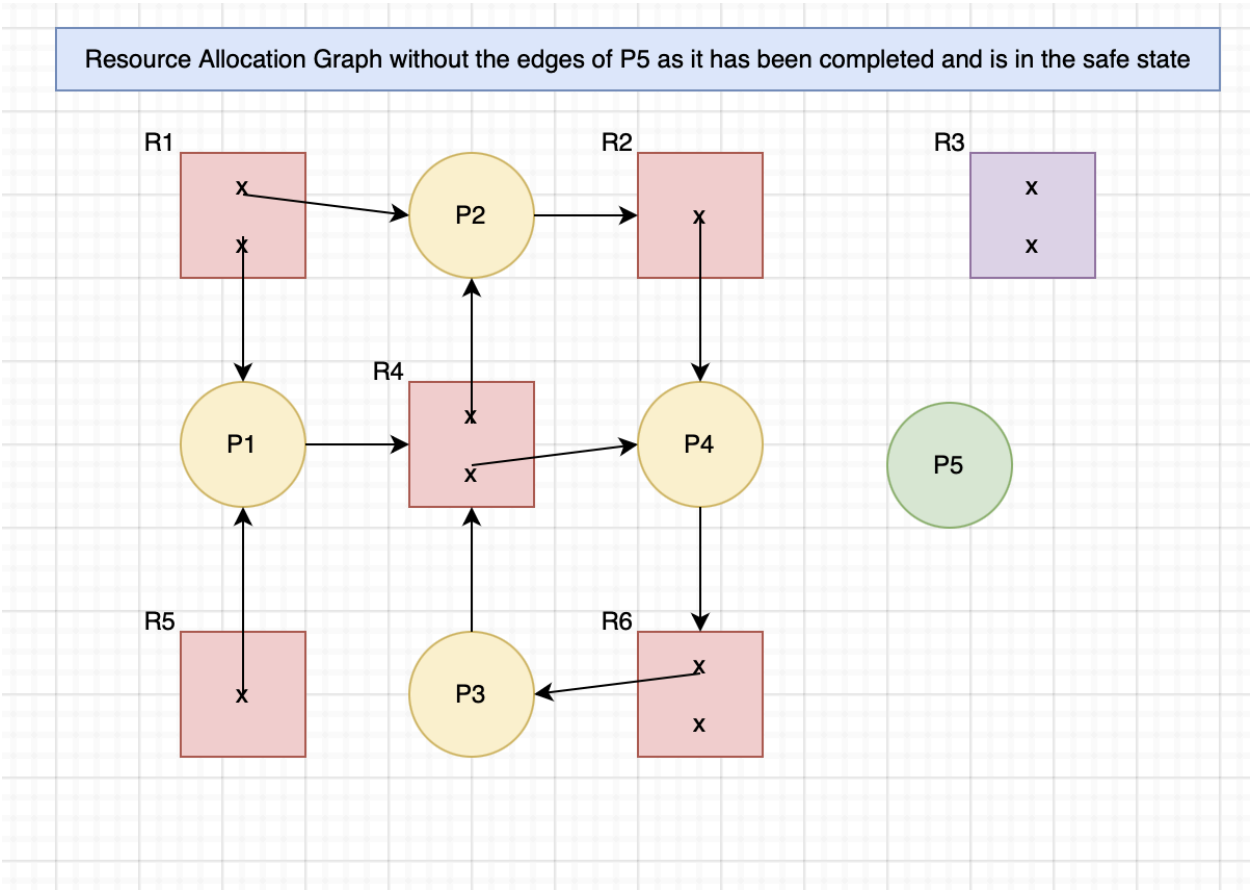

STEP 2:

IF Request <= Available; new avail = avail + allocation

P1: 000100 <= 002001 ; false

P2: 010000 <= 002001 ; false

P3: 000100 <= 002001 ; false

P4: 000001 <= 002001 ; true → 002001 + 010100

= 012101

Therefore, All Request And Allocated Edges for P4 are removed and it enters the execution state ; exec state{P5→P4}

New Resource Allocation Graph and Matrix:

	Allocation	Request	Available
Process	R1 R2 R3 R4 R5 R6	R1 R2 R3 R4 R5 R6	R1 R2 R3 R4 R5 R6
P1	100010	000100	012101
P2	100100	010000	
P3	000001	000100	
P4			
P5			

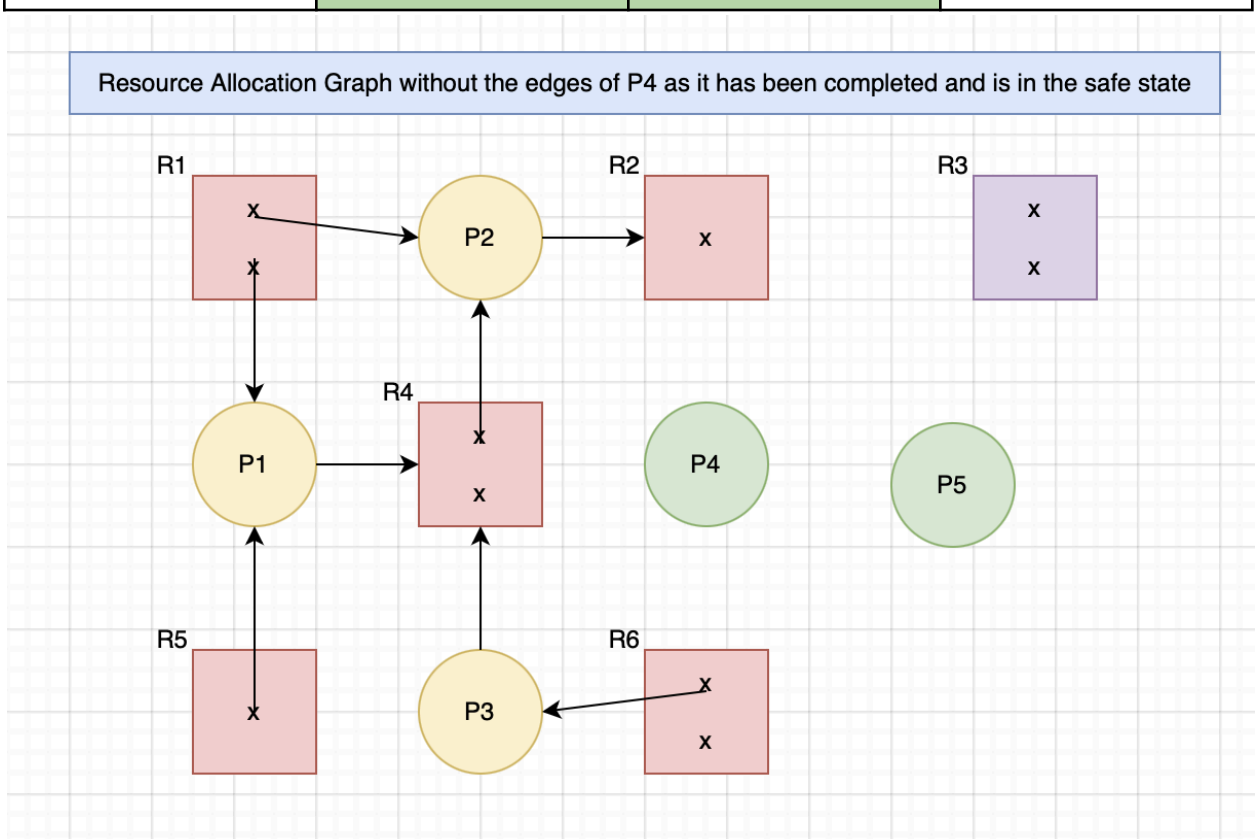

STEP 3:

IF Request <= Available; new avail = avail + allocation

P1: 000100 <= 012101 ; true → 012101 + 100010

= 112111

Therefore, All Request And Allocated Edges for P1 are removed and it enters the execution state ; exec state{P5→P4→P1}

New Resource Allocation Graph and Matrix:

	Allocation	Request	Available
Process	R1 R2 R3 R4 R5 R6	R1 R2 R3 R4 R5 R6	R1 R2 R3 R4 R5 R6
P1			112111
P2	100100	010000	
P3	000001	000100	
P4			
P5			

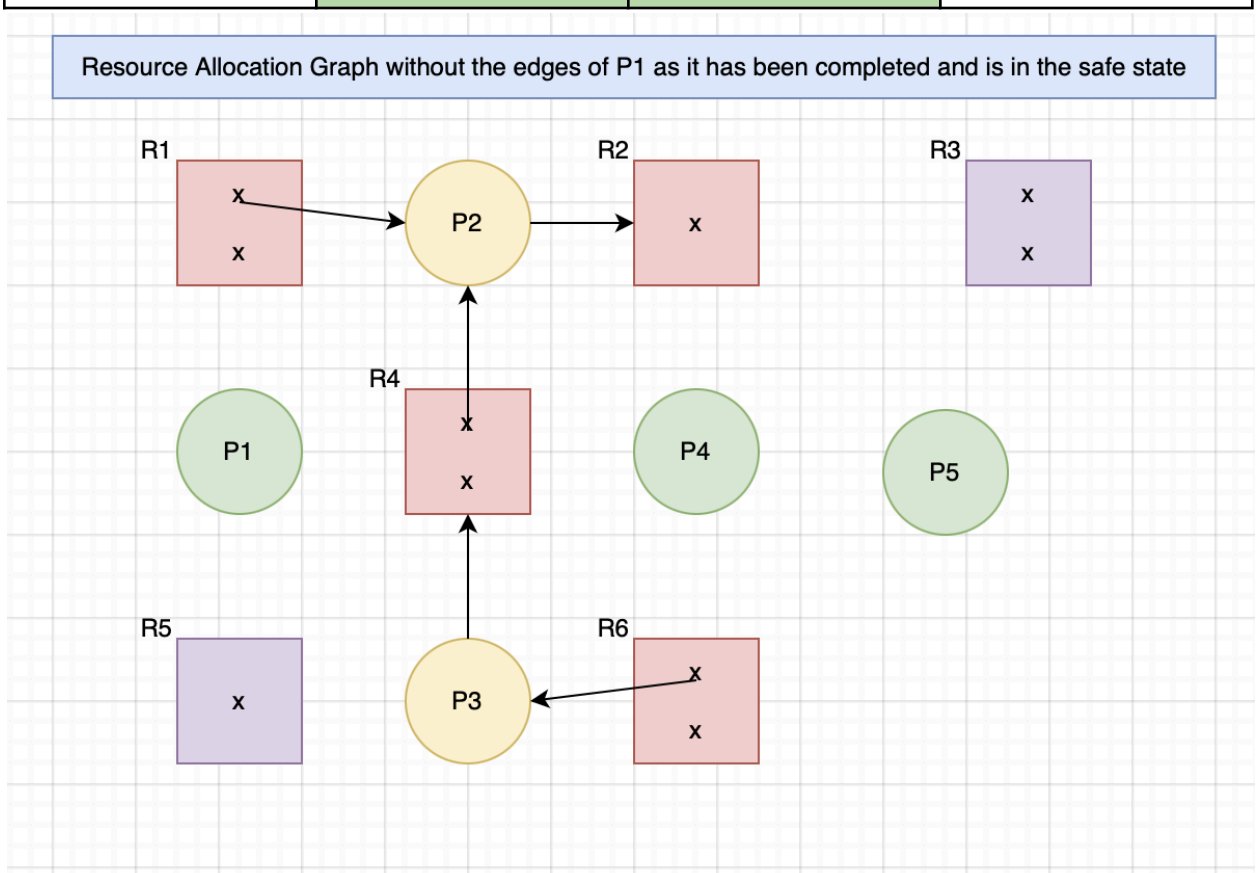

STEP 4:

IF Request <= Available; new avail = avail + allocation

P2: 010000 <= 112111 ; true → 112111 + 100100

= 212211

Therefore, All Request And Allocated Edges for P1 are removed and it enters the execution state ; exec state{P5→P4→P1→P2}

New Resource Allocation Graph and Matrix:

	Allocation	Request	Available
Process	R1 R2 R3 R4 R5 R6	R1 R2 R3 R4 R5 R6	R1 R2 R3 R4 R5 R6
P1			212211
P2			
P3	000001	000100	
P4			
P5			

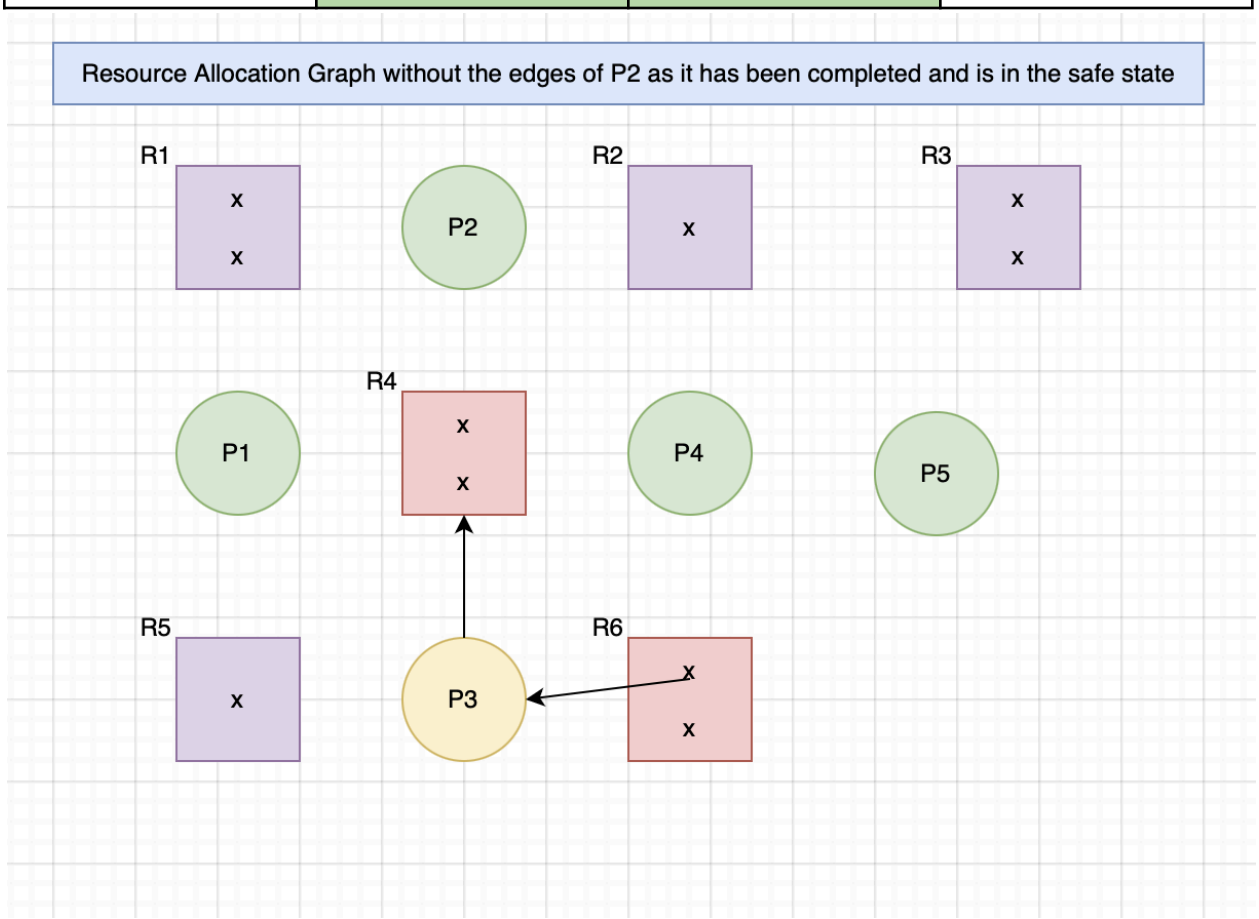

STEP 5:

IF Request <= Available; new avail = avail + allocation

P3: 000100 <= 212211 ; true → 212211 + 000001

= 212212

Therefore, All Request And Allocated Edges for P3 are removed and it enters the execution state ; exec state{P5→P4→P1→P2→P3}

New Resource Allocation Graph and Matrix:

	Allocation	Request	Available
Process	R1 R2 R3 R4 R5 R6	R1 R2 R3 R4 R5 R6	R1 R2 R3 R4 R5 R6
P1			212212
P2			
P3			
P4			
P5			

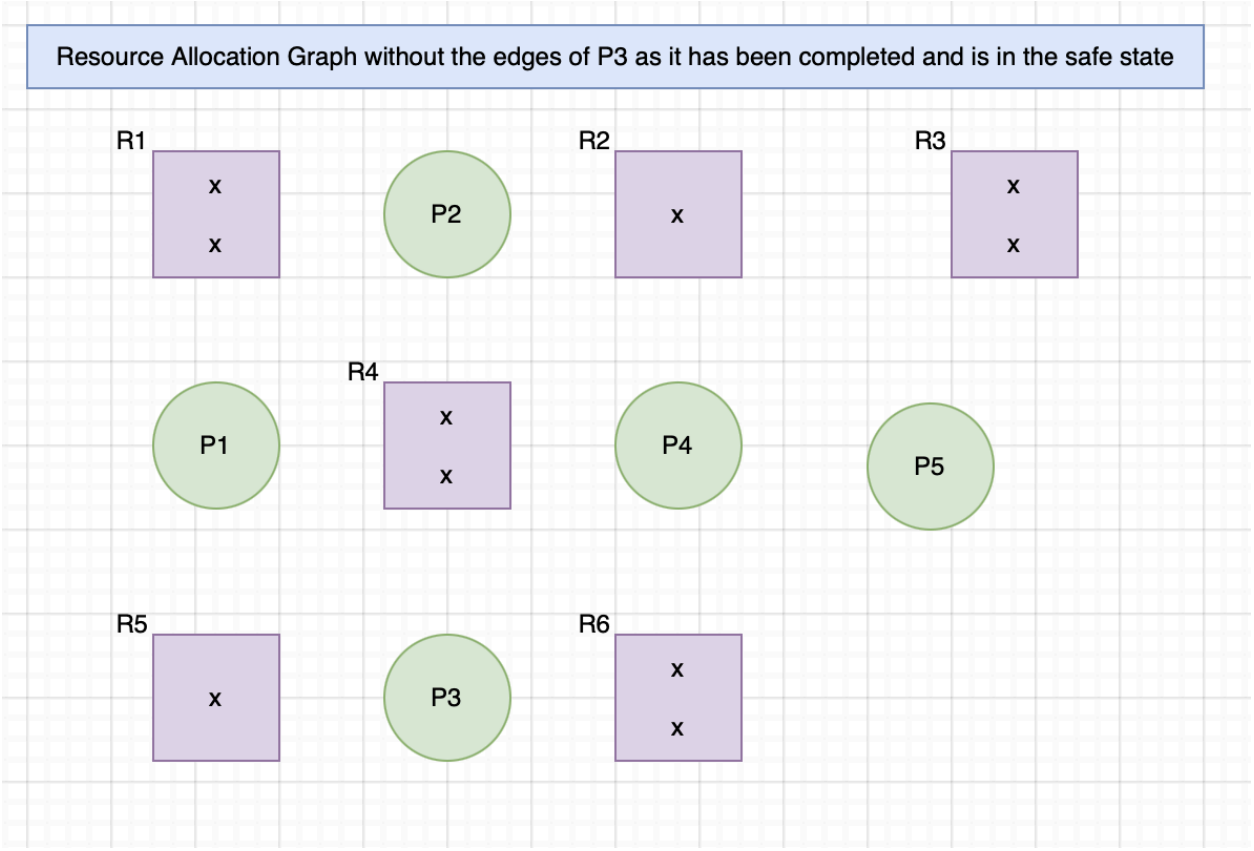

Doing the above steps, all processes can run and obtain needed resources. Consequently, there is no deadlock in the system as all processes are put into the execution state making it a safe system. Execution State: {P5→P4→P1→P2→P3}

c) None of the processes are in a deadlock state, as all of the processes complete in the order, P5→P4→P1–P2→P3.

References

Anon, (2023). What are the advantages of using a RAID 5 configuration? | TutorChase. [online] Available at: https://www.tutorchase.com/answers/a-level/computer-science/what-are-the-advantages-of-using-a-raid-5-configuration [Accessed 18 May 2025].

Caldwell, R. (2023). Liquid Web. [online] Liquid Web. Available at: https://www.liquidweb.com/blog/raid-level-1-5-6-10/.

SearchITOperations. (n.d.). What is storage pools? - Definition from WhatIs.com. [online] Available at: https://www.techtarget.com/searchitoperations/definition/storage-pools.

WhatIs.com. (n.d.). What is paging? A definition from WhatIs.com. [online] Available at: https://www.techtarget.com/whatis/definition/paging.